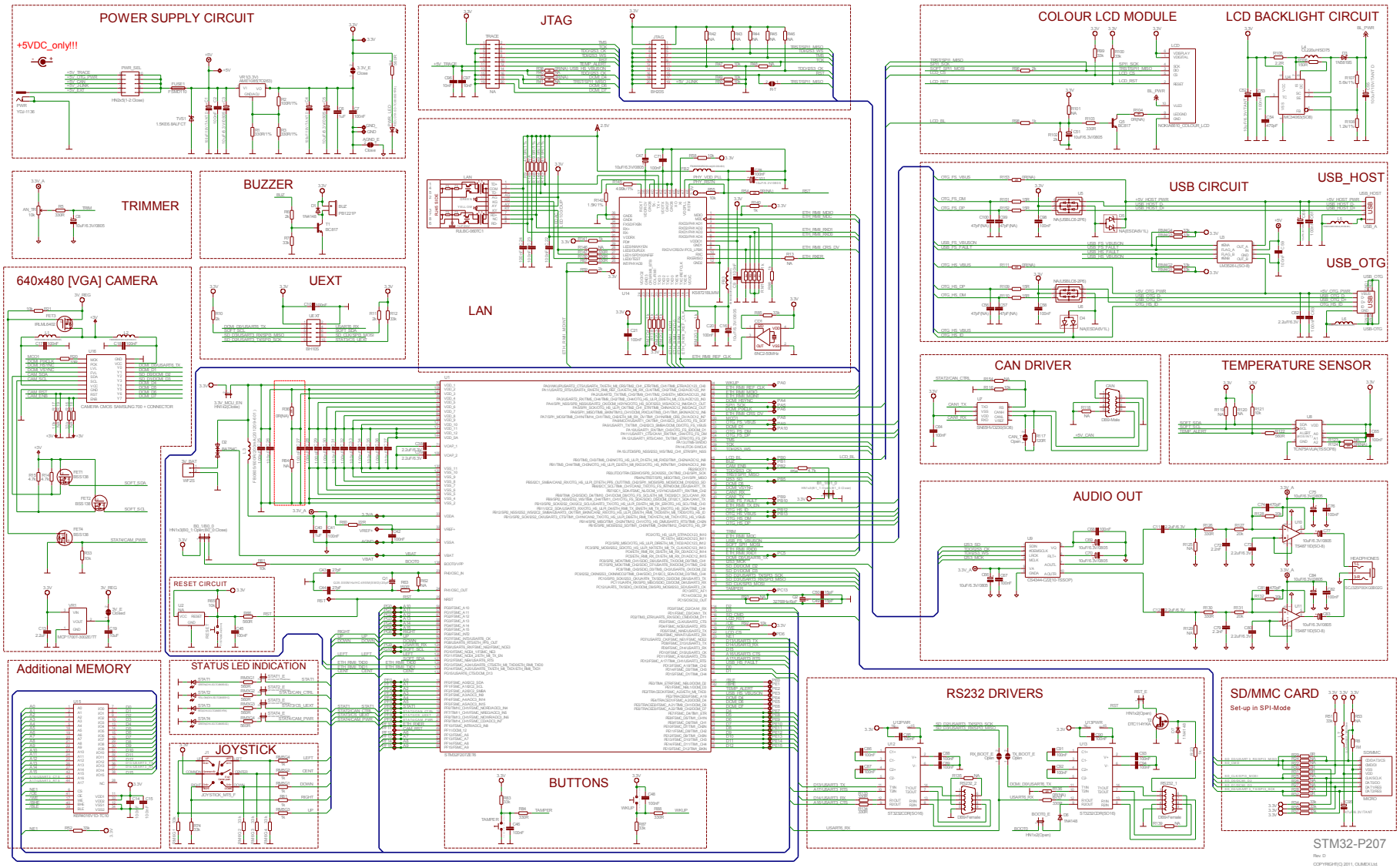
POWER SUPPLY CIRCUIT
+5VDC_only!!!
JTAG
COLOUR LCD MODULE
LCD BACKLIGHT CIRCUIT
TRIMMER
BUZZER
LAN
USB CIRCUIT
USB_HOST
USB_OTG
640x480 [VGA] CAMERA
UEXT
CAN DRIVER
TEMPERATURE SENSOR
AUDIO OUT
RESET CIRCUIT
Additional MEMORY
STATUS LED INDICATION
JOYSTICK
BUTTONS
RS232 DRIVERS
SD/MMC CARD
Set-up in SPI-Mode
STM32-P207
COPYRIGHT(C) 2011, OLIMEX Ltd.
http://www.olimex.com/dev